Prüfbericht-Nr.: *Test Report No.*:	CN22QW3W 003	**Auftrags-Nr.:** *Order No.*:	244443347 P00778272	Seite 1 von 15 *Page 1 of 15*
Kunden-Referenz-Nr.: *Client Reference No.*:	2277059	**Auftragsdatum:** *Order date*:	2022-08-15	
Auftraggeber: *Client*:	Renac Power Technology Co., Ltd. Block C-12, No. 20 Datong Road, Comprehensive Bonded Zone, Suzhou Hi-Tech District, Suzhou, China			
Prüfgegenstand: *Test item*:	Rechargeable Li-ion Battery System			
Bezeichnung / Typ-Nr.: *Identification / Type No.*:	TB-H1-3.74, TB-H1-7.48, TB-H1-11.23, TB-H1-14.97, TB-H1-18.7			
Auftrags-Inhalt: *Order content*:	CE-LVD			
Prüfgrundlage: *Test specification*:	EN 62477-1:2012+A11:2014+A1:2017+A12:2021			
Wareneingangsdatum: *Date of receipt*:	2022-08-11			
Prüfmuster-Nr.: *Test sample No.*:	Engineering sample			
Prüfzeitraum: *Testing period*:	2022-08-11			
Ort der Prüfung: *Place of testing*:	See page 4			
Prüflaboratorium: *Testing laboratory*:	Renac Power Technology Co., Ltd			
Prüfergebnis*: *Test result**:	Pass			

geprüft von: *tested by:*	Stone Wang Mike Yu	**genehmigt von:** authorized by:	
Datum: Date:	2022-12-03	**Datum**: Date:	2022-12-03
Stellung / Position	StoneWang&MikeYu PE&Trainee	**Stellung** / Position	Bowen Dong Reviewer

Sonstiges / *Other*:

1. Part of enclosures of the products has been changed in this edition
2. This report is based on the report of CN22QW3W 001/004
3. This report includes the following documents: - Attachment 1: Photo documentation (17 pages);
   - Attachment 2: Critical components information (6 pages)

Zustand des Prüfgegenstandes bei Anlieferung: Prüfmuster vollständig und unbeschädigt
Condition of the test item at delivery: *Test item complete and undamaged*

* Legende	P(ass) = entspricht o.g. Prüfgrundlage(n)	F(ail) = entspricht nicht o.g. Prüfgrundlage(n)	N/A = nicht anwendbar	N/T = nicht getestet
* *Legend:*	*P(ass) = passed a.m. test specification(s)*	*F(ail) = failed a.m. test specification(s)*	*N/A = not applicable*	*N/T = not tested*

V05

Test Report issued under the responsibility of:

TÜVRheinland®

TEST REPORT
IEC 62477-1
Safety requirements for power electronic converter systems and equipment
Part 1: General

Report Reference No. ..... :	**CN22QW3W 003**
Date of issue ..... :	See cover page
Total number of pages ..... :	See cover page
Name of Testing Laboratory preparing the Report ..... :	See cover page
Applicant's name ..... :	See cover page
Address ..... :	See cover page
TRF template used ..... :	IECEE OD-2020-F1:2020, Ed.1.3
Standard ..... :	IEC 62477-1:2012, AMD1:2016
Test procedure ..... :	CE-LVD
Non-standard test method ..... :	N/A
Test Report Form No ..... :	IEC62477_1D
Test Report Form(s) Originator ... :	VDE Prüf- und Zertifizierungsinstitut GmbH
Master TRF ..... :	Dated 2020-09-08

If this Test Report Form is used by non-IECEE members, the IECEE/IEC logo and the reference to the CB Scheme procedure shall be removed.

This report is not valid as a CB Test Report unless signed by an approved CB Testing Laboratory and appended to a CB Test Certificate issued by an NCB in accordance with IECEE 02.

General disclaimer:

The test results presented in this report relate only to the object tested.
This report shall not be reproduced, except in full, without the written approval of the Issuing CB Testing Laboratory. The authenticity of this Test Report and its contents can be verified by contacting the NCB, responsible for this Test Report.

Test item description.....:	Rechargeable Li-ion Battery System
Trade Mark.....:	RENAC
Manufacturer.....:	Same as applicant
Model/Type reference .....:	See cover page
Ratings.....:	See copy of marking label and model list.

Responsible Testing Laboratory (as applicable), testing procedure and testing location(s):			
☐	**CB Testing Laboratory:**		
Testing location/ address.....:			
Tested by (name, function, signature) .....:			
Approved by (name, function, signature)..:			
☐	**Testing procedure: CTF Stage 1:**		
Testing location/ address.....:			
Tested by (name, function, signature) .....:			
Approved by (name, function, signature)..:			
☐	**Testing procedure: CTF Stage 2:**		
Testing location/ address.....:			
Tested by (name + signature).....:			
Witnessed by (name, function, signature).:			
Approved by (name, function, signature)..:			
☐	**Testing procedure: CTF Stage 3:**		
☐	**Testing procedure: CTF Stage 4:**		
Testing location/ address.....:			
Tested by (name, function, signature) .....:			
Witnessed by (name, function, signature).:			
Approved by (name, function, signature)..:			
Supervised by (name, function, signature):			

List of Attachments (including a total number of pages in each attachment):

Attachment 1: Photo documentation (17 pages)
Attachment 2: Critical components information (6 pages)

Summary of testing:

Tests performed (name of test and test clause):	**Testing location:**
N/A (Only enclosure change, there is no need to conduct the tests after evaluation)	Block C-12, No. 20 Datong Road, Comprehensive Bonded Zone, Suzhou Hi-Tech District, Suzhou, China Note: The products were evaluated in above address

Summary of compliance with National Differences (List of countries addressed):

EU

There is no difference between IEC 62477-1:2012+A1:2016 and EN 62477-1:2012+A11:2014+A1:2017+A12:2021.

☒ **The product fulfils the requirements of IEC 62477-1:2012+A1:2016 and EN 62477-1:2012+A11:2014+A12:2021**

Statement concerning the uncertainty of the measurement systems used for the tests

(may be required by the product standard or client)

☐ **Internal procedure used for type testing through which traceability of the measuring uncertainty has been established:**

Procedure number, issue date and title:

Calculations leading to the reported values are on file with the NCB and testing laboratory that conducted the testing.

☒ **Statement not required by the standard used for type testing**

(Note: When IEC or ISO standard requires a statement concerning the uncertainty of the measurement systems used for tests, this should be reported above. The informative text in parenthesis should be delete in both cases after selecting the applicable option)

Copy of marking plate:

The artwork below may be only a draft. The use of certification marks on a product must be authorized by the respective NCBs that own these marks.

Label for Module and Battery System:

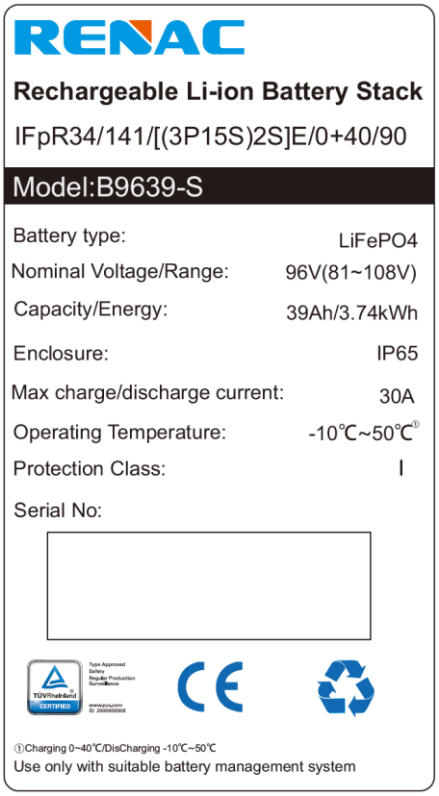

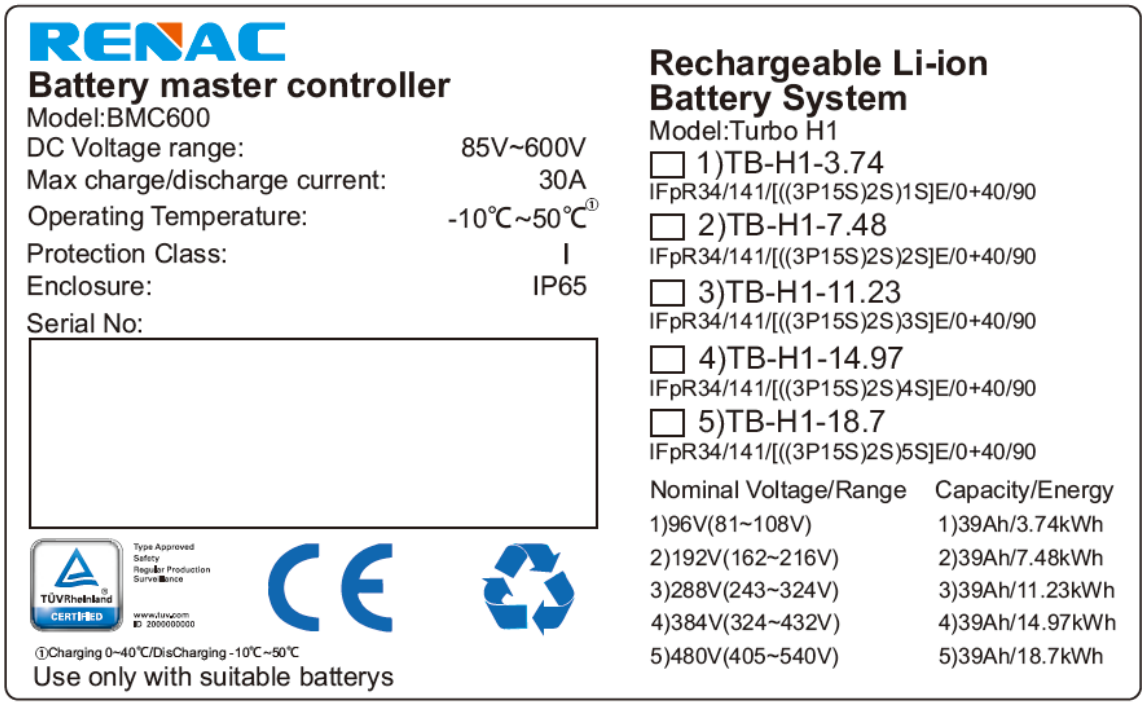

Module and Battery System Warning Label:

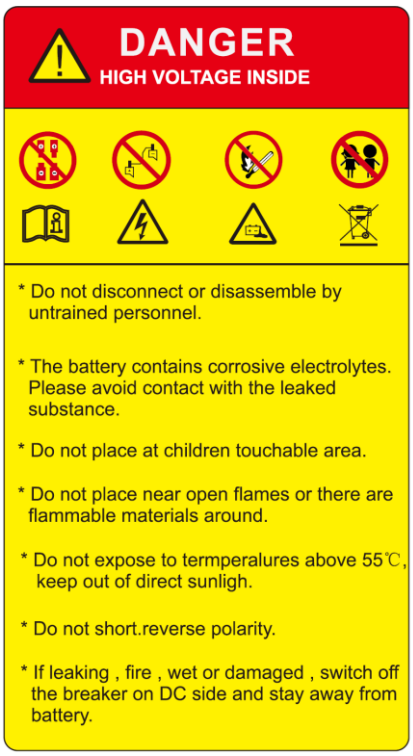

Module

Battery System

The serial number consists of 16 digits and contains the following information: 1) Product model 2) Reserved 3) Year and Month 4) Serial number

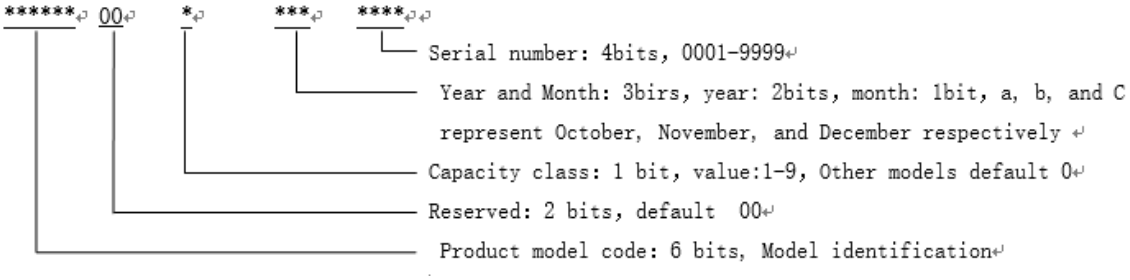

Manufacturing date shown on above SN with 10th to 12th
"21B" mean to Nov, 2021 (for example)

Test item particulars.....:	
Classification of installation and use .....:	N/A
Supply Connection.....:	N/A
Possible test case verdicts:	
- test case does not apply to the test object..... :	N/A
- test object does meet the requirement ..... :	P (Pass)
- test object does not meet the requirement..... :	F (Fail)
Testing..... :	
Date of receipt of test item ..... :	See cover page
Date (s) of performance of tests..... :	See cover page

General remarks:

"(See Enclosure #)" refers to additional information appended to the report.
"(See appended table)" refers to a table appended to the report.

Throughout this report a ☐ comma / ☒ point is used as the decimal separator.

Manufacturer's Declaration per sub-clause 4.2.5 of IECEE 02:

The application for obtaining a CB Test Certificate includes more than one factory location and a declaration from the Manufacturer stating that the sample(s) submitted for evaluation is (are) representative of the products from each factory has been provided ..... :	☐ **Yes** ☒ **Not applicable**

When differences exist; they shall be identified in the General product information section.

Name and address of factory (ies) ..... :	Renac Power Technology Co., Ltd. Block C-12, No. 20 Datong Road, Comprehensive Bonded Zone, Suzhou Hi-Tech District, Suzhou, China

General product information and other remarks:

Product Description:

This product is used for Energy Storage System.

The battery system consists of one master controller (BMC600) and several battery stacks (B9639-S). The battery system can be expanded up to maximum 5 stacks depend on the end-user request.

The battery module which named B9639-S is constructed with two small modules in series. Each small module contains 45 battery cells in 3P15S. The battery module contain one CMU board for measuring and collecting the cell parameters and uploading the information of cell voltage and temperature to BMU in master controller.

The battery system has overcharge, over-discharge, over current and short-circuits proof circuit.

The electronic circuits and software controls for the battery system replied upon protective functions of the battery management system which have been evaluated in accordance with IEC 60730-1 Annex H.

The EUTs are outdoor type. The insulation between the DC circuit and the metal enclosure is basic insulation. And the insulation between the DC circuit and communication ports is reinforced insulation or double insulation.

Block diagram as below:

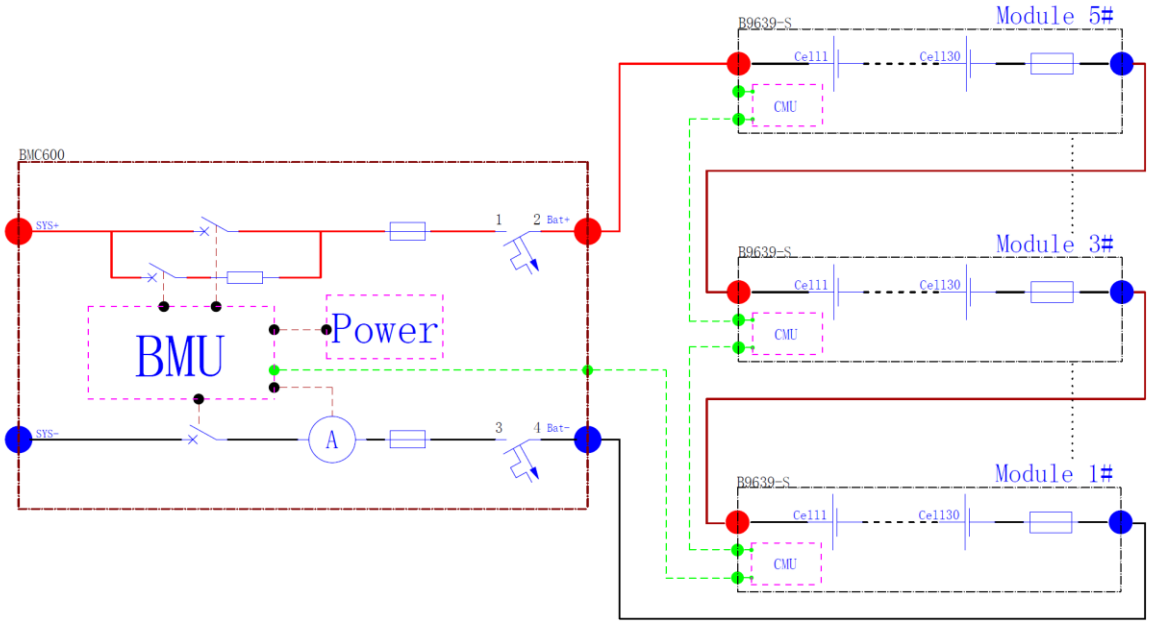

Model list:

No.	Model	Battery System	Nominal Energy (kWh)	Voltage (V)
1	TB-H1-3.74	BMC600 + B9639-S	3.74	81-108
2	TB-H1-7.48	BMC600 + 2*B9639-S	7.48	162-216
3	TB-H1-11.23	BMC600 + 3*B9639-S	11.23	243-324
4	TB-H1-14.97	BMC600 + 4*B9639-S	14.97	324-432
5	TB-H1-18.7	BMC600 + 5*B9639-S	18.7	405-540

The main features of one battery system are shown as below:

Battery System designation:

Rechargeable Li-ion Battery System					
Type/model	TB-H1-3.74	TB-H1-7.48	TB-H1-11.23	TB-H1-14.97	TB-H1-18.7
Cell Type	LiFePO4				
Component	BMC600 + B9639-S	BMC600 + 2*B9639-S	BMC600 + 3*B9639-S	BMC600 + 4*B9639-S	BMC600 + 5*B9639-S
Nominal voltage [V]	96	192	288	384	480
Operating voltage range [V]	81-108	162-216	243-324	324-432	405-540
Battery Module	1 Module	2 Module	3 Module	4 Module	5 Module
Structure	(3P15S)2S	((3P15S)2S) 2S	((3P15S)2S)2 S	((3P15S)2S)2 S	((3P15S)2S) 2S
Rated capacity [Ah]	39				
Nominal Energy [kWh]	3.74	7.48	11.23	14.97	18.7

Usable Energy [kWh]	3.36	6.73	10.1	13.47	16.83
Nominal Current [A]	20				
Recommend Current [A]	20				
Maximum charging current [A]	30				
Maximum discharging current [A]	30				
Over voltage category	OVC II				
Available charge/discharge temperature range [℃]	Charge: 0℃~40℃ Discharge: -10℃~50℃				
Storage temperature [℃]	0℃ to 35℃ (6 months)				
Dimension (H*W*D) [mm]	Control box BMC: 280*651*217 Module B9639-S: 326*651*217				
Weight [kg]	49.5	86.8	124.1	161.4	198.7
Overcharge protected voltage supply by battery system	≥ 3.60 V/Cell				
Temperature threshold for charge protection [℃]	43				
Protective Class	I				
Installation Type	Grounding mounting				
Enclosure Protection (IP)	IP65				
Pollution degree	3				
Cooling type	Natural				
Altitude [m]	≤ 2000				
Notes: Ambient range: Charge: 0-40°C, discharge: -10-50°C,Max continuous current is 30A when ambient temperature is no more than 30°C, it will derating when ambient is more than 30°C , charge current is 7.8A when ambient temperature at 35°C, discharge current is 16A when ambient temperature at 40°C, discharge current is 7.8A when ambient temperature at 50°C)					

This report is updated base on CN22QW3W 001, and this report is not valid without the original test Report.

History of amendments and modifications:

CN22QW3W 001	Original report

CN22QW3W 002	Co-licence
CN22QW3W 003	Enclosure change

Note: Battery system has the follow changes: decorative covers have been removed, screws are fixed inside of front cover, added nuts to lock the screws on the front cover. The details of changes shall refer to photo documentation.

Additional test item particulars :

Equipment mobility:	☐ movable ☐ hand-held ☐ stationary ☒ fixed ☐ transportable ☐ for building-in
Connection to the mains :	☐ pluggable equipment ☐ direct plug-in ☒ permanent connection ☐ for building-in
Environmental category :	☒ outdoor ☐ indoor unconditional ☐ indoor conditional
Over voltage category Mains :	☐ OVC I ☐ OVC II ☐ OVC III ☐ OVC IV Not directly connected to mains
Over voltage category Battery:	☐ OVC I ☒ OVC II ☐ OVC III ☐ OVC IV
Mains supply tolerance (%) :	--
Tested for power systems :	N/A
IT testing, phase-phase voltage (V) :	N/A
Class of equipment :	☒ Class I ☐ Class II ☐ Class III ☐ Not classified
Mass of equipment (kg) :	See model list
Pollution degree :	☐ PD 1 ☐ PD 2 ☒ PD 3
IP protection class:	IP65
For more information:	N/A

This test report includes the following Appendixes:		
Appendix No.	Description	Page(s)
N/A	N/A	N/A

IEC 62477-1			
Clause	Requirement – Test	Result – Remark	Verdict
4	**PROTECTION AGAINST HAZARDS**		P
4.1	General		P
4.2	Fault and abnormal conditions	The change has no effect for this section	P
	Components in 4.2 also include insulation systems, ports, etc (IEC 62477-1:2012/AMD1:2016)	The change has no effect for this section	P
4.3	Short-circuit and overcurrent protection	The change has no effect for Protection against electric shock	P
4.4	Protection against electric shock	The change has no effect for Protection against electrical energy hazards	P
4.5	Protection against electrical energy hazards		P
4.6	Protection against fire and thermal hazards	The circuit has no change this time	N/A
4.6.1	Circuits representing a fire hazard	There is no components up-dated in battery system this time	N/A
4.6.2	Components representing a fire hazard	The change has no effect for this section	P
4.6.3	Fire enclosures		P
4.6.3.1	General		P
	Fire enclosures are used to reduce the risk of fire to the environment, independent of the location where they are installed. A fire enclosure shall be provided for all PECS unless: • the product committee specifies that a fire enclosure is not required; or • there is an agreement between the user and the manufacturer; or • the PECS is intended to be used only in areas without combustible materials and is marked according to 6.3.5.	Metal enclosure provided	P
4.6.3.2	Flammability of enclosure materials	Enclosure materials has no change, there is no effect for this section	N/A
4.6.3.3	Openings in fire enclosures	Openings in fire enclosures has no change, there is no effect for this section	N/A
4.6.4	Temperature limits	The change has no effect for this section	N/A
4.6.5	Limited power sources	The change has no effect for LPS	N/A
4.7	Protection against mechanical hazards	The change has no effect for this section	P

IEC 62477-1			
Clause	Requirement – Test	Result – Remark	Verdict
4.8	Equipment with multiple sources of supply	No-multiple sources of supply	N/A
4.9	Protection against environmental stresses	The change has no effect for this section	P
4.10	Protection against Sonic Pressure Hazards	The change has no effect for this section	P
4.11	Wiring and connections	Wiring and connections has no change this time	P
4.12	Enclosures		P
4.12.1	General	Considered	P
4.12.2	Handles and manual controls	This section has no change	P
4.12.3	Cast metal	Sheet metal	N/A
4.12.4	Sheet metal		P
4.12.5	Stability	The change has no effect for stability	P
5	**TEST REQUIRMENTS**	Only minor change for enclosure, there is no test after evaluation	N/A
6	**INFORMATION AND MARKING REQUIREMENTS**	The change has no effect for INFORMATION AND MARKING REQUIREMENTS	N/A

EN 62477-1/A11			
Clause	Requirement – Test	Result – Remark	Verdict
	FOREWORD		P
	This document (EN 62477-1:2012/A11:2014) has been prepared by CLC/TC 22X "Power electronics". The aim behind this Amendment is to link EN 62477-1:2012 to the Low Voltage Directive 2006/95/EC, further to a CLC/TC 22X request, approved by the Technical Board by the decision D146/C017. In addition, a recent Technical Board decision (D147/C061), confirmed that EN 62477-1:2012 partially supersedes EN 50178:1997. This standard covers the Principle Elements of the Safety Objectives for Electrical Equipment Designed for Use within Certain Voltage Limits (LVD - 2006/95/EC).		P

EN 62477-1/A12			
Clause	Requirement – Test	Result – Remark	Verdict
ZZ	**ANNEX ZZ (INFORMATIVE)** **RELATIONSHIP BETWEEN THIS EUROPEAN STANDARD AND THE SAFETY OBJECTIVES OF DIRECTIVE 2014/35/EU [2014 OJ L96] AIMED TO BE COVERED**		P
	This European standard has been prepared under a Commission's standardisation request relating to harmonised standards in the field of the Low Voltage Directive, M/511, to provide one voluntary means of conforming to safety objectives of Directive 2014/35/EU of the European Parliament and of the Council of 26 February 2014 on the harmonisation of the laws of the Member States relating to the making available on the market of electrical equipment designed for use within certain voltage limits [2014 OJ L96]. Once this standard is cited in the Official Journal of the European Union under that Directive, compliance with the normative clauses of this standard given in Table ZZ.1 confers, within the limits of the scope of this standard, a presumption of conformity with the corresponding safety objectives of that Directive, and associated EFTA regulations.		P