Turbo H3

Series

User Manual

Turbo-H3-7.1

Turbo-H3-9.5

RENAC

Content

Notice

This manual contains important safety instructions that must be followed during installation and maintenance of the equipment.

Save the manual!

This manual must be stored carefully and be available at all times.

Copyright Declaration

RENAC Power reserves the right of final interpretation. This manual may be updated according to user's or customer's feedback. The information in this manual is subject to change without notice. Please check our website at http://www.renacpower.com for latest version.

1. About This Manual

1.1 Applicability

Please read the product manual carefully before installation,operation or maintenance.This manual contains important safety instructions and installation instructions that must be followed during installation and maintenance of the equipment.

TB-H3-7.1
TB-H3-9.5

1.2 Target group

The instructions in this document may only be performed by qualified persons who must have the following skills:
• Knowledge of how batteries work and are operated
• Knowledge of how an inverter works and is operated
• Knowledge of, and adherence to the locally applicable connection requirements, standards, and directives
• Knowledge of, and adherence to this document and the associated system documentation, including all safety instructions
• Training in dealing with the hazards associated with the installation and operation of electrical equipment and batteries
• Training in the installation and commissioning of electrical equipment

Failure to do so will make any manufacturer's warranty, guarantee or liability null, and void unless you can prove that the damage was not due to non-compliance.

1.3 Symbols used

The following types of safety instructions and general information appear in this document as described below:

⚠	**DANGER!** 'Danger' indicates a hazard with a high level of risk that, if not avoided, will result in death or serious injury.
⚠	**WARNING!** 'Warning' indicates a hazard with a medium level of risk that, if not avoided, will result in death or serious injury.
⚠	**CAUTION!** 'Caution' indicates a hazard with a low level of risk that, if not avoided, could result in minor or moderate injury.
NOTICE	**NOTICE!** 'Notice' indicates a situation that, if not avoided, could result in equipment or property damage.
☞	**NOTE!** 'Note' provides tips that are valuable for the optimal operation of your product.

2. Safety

2.1 General Safety

The Turbo H3 Series battery is for residential and works with a photovoltaic system. It is a high voltage Li-ion battery storage system, with the control module on itself. It could be operated in on-grid, off-grid and backup modes with compatible inverters.
The battery system could be connected to the Internet through Renac hybrid inverters maintenance and firmware updating. Read all safety instructions carefully prior to any work and observe them at all times when working on or with Turbo H3 Series battery.
Incorrect operation or work may cause:
◆ injury or death to the operator or a third party;
◆ damage to the inverter or other properties.

2.2Important safety instructions

⚠	**DANGER!** ◆Danger to life due to electric shock when live components or DC cables are touched. The DC cables connected to an inverter may be live. Touching live DC cables results in death or serious injury due to electric shock. Disconnect the battery system and inverter from voltage sources and make sure it cannot be reconnected before working on the device. Do not touch non-insulated parts or cables. Do not remove the terminal block with the connected DC conductors from the slot under load. Wear suitable personal protective equipment for all work on the battery system. Observe all safety information of the inverter.
⚠	**WARNING!** ◆Battery Module Leakage If the battery modules leak electrolytes, contact with the leaking liquid or gas should be avoided. The electrolyte is corrosive, and the contact may cause skin irritation and chemical burns. If one is exposed to the leaked substance, do these actions: Inhalation: Evacuate the contaminated area, and seek medical help immediately. Eye contact: Rinse eyes with flowing water for 15 minutes and seek medical help immediately. Skin contact: Wash the affected area thoroughly with soap and water and seek medical help immediately. Ingestion: Induce vomiting and seek medical help immediately . ◆The battery modules and its components should be protected from damage when transporting and handling. Do not impact, pull, drag, or step on the battery modules. Do not insert unrelated objects into any part of the battery modules. Do not throw the battery module into a fire. Do not soak the battery modules in water or seawater. Do not expose to strong oxidizers. Do not short circuit the battery modules. The battery modules cannot be stored at high temperatures (more than 50°C). The battery modules cannot be stored directly under the sun. The battery modules cannot be stored in a high humidity environment. Do not use the battery modules if it is defective, or appears cracked, broken or otherwise damaged,or fails to operate. Do not attempt to open, disassemble, repair, tamper with, or modify the battery modules. The battery modules are not user-serviceable. Do not use cleaning solvents to clean the battery modules
⚠	**CAUTION!** ◆Risk of injury due to weight of the battery module Injuries may result if the battery module is lifted incorrectly or dropped while being transported or installed. • Transport and lift the battery module carefully. Take the weight of the battery module into account. • Wear suitable personal protective equipment for all work on the battery system. ◆If the battery is not installed within one month after receiving the battery, the battery must be charged till the SOC is more than 50% for maintains.
NOTICE	**NOTICE!** Firefighting Measures The battery modules may catch fire when it is put into the fire. In case of a fire, please make sure that an ABC or carbon dioxide extinguisher is nearby. Water cannot be used to extinguish the fire. Full protective clothing and self-contained breathing apparatus are for the firefighters to extinguish the fire. ◆Damage to the battery system due to under voltages If the battery system doesn't start at all, please contact Renac after-sales service within 48 hours. Otherwise, the battery could be permanently damaged.
☞	**NOTE!** ◆Electrical installation and maintenance must be carried out by competent electricians according to local regulations.

2.3 Explanation of symbols

This section gives an explanation of all the symbols shown on the type label.
Symbols on the type label

Symbol	Explanation
	TÜV Rheinland mark
	Do not disconnect or disassemble by untrained personnel.
	Do not short circuit.
	Do not expose the battery to open flame, heat or sparks, as there is a risk of fire or explosion.
	Keep the battery modules away from children.
	Observe the documents Observe all documents supplied with the system.
	Warning! Metal parts of the batteries are always under voltage. Do not short-circuit the batteries! In case of a short-circuit, may flow very high currents and cause burns. By Touching conductive parts can cause cardiac arrhythmia and shock.
	Tha battery contains corrosive electrolytes.Please avoid contact with the leaked substance.
	WEEE designation Do not dispose of the system together with the household waste but in accordance with the disposal regulations for electronic waste applicable at the installation site.

3. Introduction

3.1 Product terminals

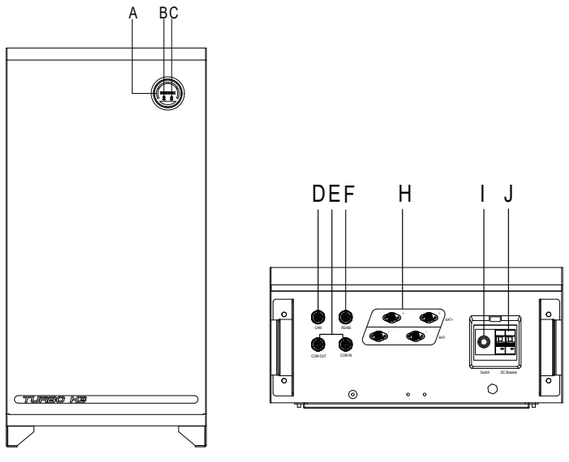

Object	Description
A	Battery level indicator
B	RUN Indicator
C	ALM Indicator
D	CAN port
E	Parallel ports
F	RS485 port
H	Power terminals
I	Switch
J	DC Breaker

3.2 Dimensions

3.2.1 TB-H3-7.1

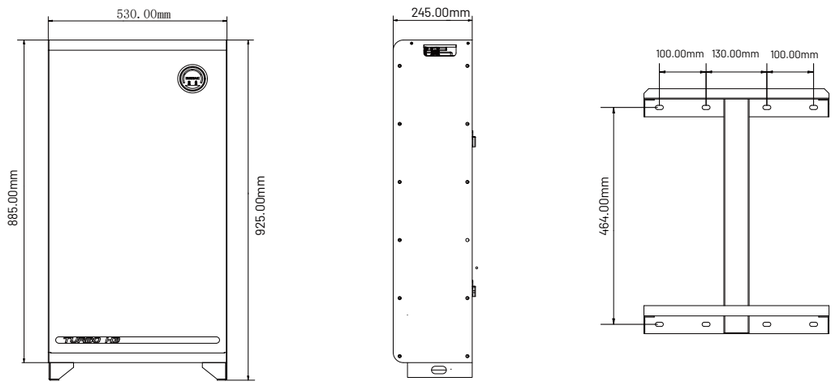

3.2.1 TB-H3-9.5

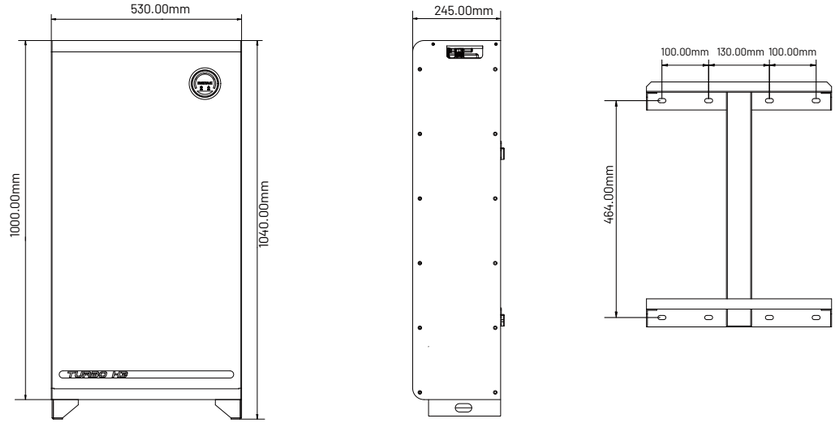

3.4 Battery Capacity Description

The battery supports power and capacity expansion. 6pcs battery modules can be connected in parallel

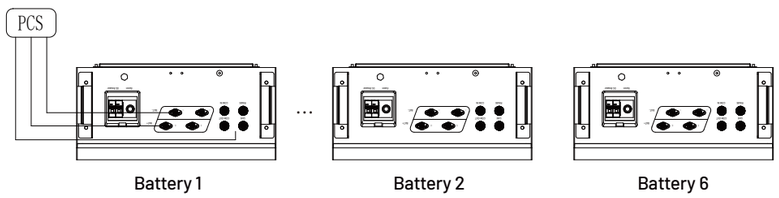

4. Technical data

Model	TB-H3-7.1			TB-H3-9.5		
Electrical Parameters						
Nominal Voltage [V]	307.2			409.6		
Nominal Capacity [Ah]	23			23		
Nominal Energy [kWh] [1]	7.1			9.4		
Usable Energy (90%DOD) [kWh]	6.4			8.5		
Voltage Range [V]	259.2 ~ 345.6			345.6 ~ 460.8		
Max. Continuous Charging / Discharging Current [A]	18.4			18.4		
Peak Current [A]	23			23		
Peak Power	7.5kW			10kW		
General						
Battery Type	$LiFePO_4$					
Size (Width * Height * Depth) [mm]	886 * 530 * 245			530*1000*245		
Net Weight [kg]	95			125		
Scablable	1	2	3	1	2	3
	7.1kWh	14.2kWh	21.3kWh	9.5kWh	19kWh	28.5kWh
	4	5	6	4	5	6
	28.4kWh	35.5kWh	42.6kWh	38kWh	47.5kWh	57kWh
Enclosure	IP65 (Indoor or Outdoor)					
Installation Type	Wall-mounted / Floor mounted					
Cooling Type	Natural					
Communication Port	CAN, RS485					
Ambient Temperature Range [℃] [2]	-20 ~ +55					
Operation Humidity	5 - 95%					
Altitude [m]	≤ 2000					
Warranty [3] [years]	10					
Cycle Life	6000 @ 85% DOD / 25℃ / 0.33C / 60% EOL					
Certification						
Certificates	IEC 62619, IEC 62040-1, IEC 62477-1, IEC 61000-6-1 / 3, UN 38.3					

[1] Nominal Energy: 100% DOD, 0.33C charge & discharge at +25℃ (test conditions).

[2] Ambient temperature: charging (-17 ~ +53℃). discharge (-17 ~ +53℃).

[3] Condition apply: refer to Renac Power Battery Warranty Policy.

5. Installation

5.1 Unpacking

The below table shows the components and mechanical parts that should be delivered.

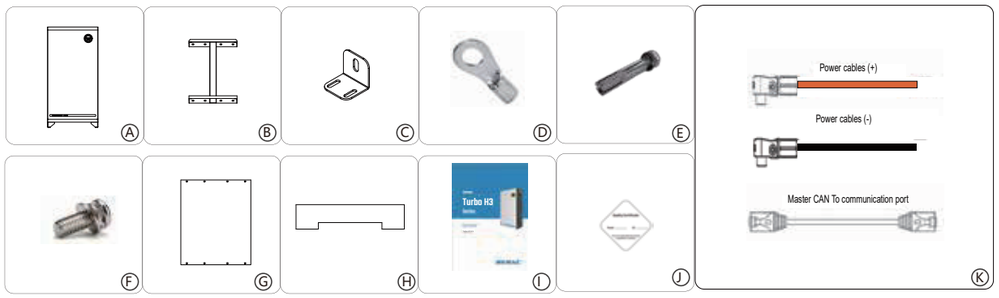

Object	Quantity	Description
A	1	Battery
B	1	Wall mounting plate
C	1	Fixing plate
D	2	Grounding terminal
E	9	Expansion tubes & Expansion screws
F	3	M5 Screw
G	1	Mounting plate
H	1	Auxiliary mounting plate
I	1	User manual and
J	1	Quality Certificate
K	1	Power cable (P+, 1.5m) Power cable (P-, 1.5m) Communication cable (1.5m)

Note:

Open the package and pick the product, check that if there is any distortion or impaired during the transportation. Meanwhile, check that if the relating accessories and the materials are here, you can see the accessories list in the table.
The instruction manual is an integral part of the unit and should therefore be read and kept carefully.
It is recommended that the packaging should not be removed until the unit is located in the installation site.

The following accessories are optional for parallel installation. Customers can select the following accessories according to the number of batteries in parallel

NO.	Pictures	Quantity	Description
1		N-1 "*"	Parallel connections cable (P+)
2	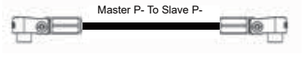	N-1 "*"	Parallel connections cable "*" (P-)
3	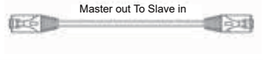	N-1 "*"	Parallel communication cable "*"

Note:
1. "*" N is indecate the parallel connections number of battery. The number of power cable and Communication cable is optional accessories according to the parallel connection demand for customer.
2. you are advised to use the standard accessories part from RENAC or customize the identical specification accessories component par from RENAC or importers.

5.2 Check for transport damage

Check if the Turbo H3 series battery has some visible external damage, such as cracks in the housing or display please contact with your dealer if you find any damage.

5.3 Installation precaution

Requirements for Installation Location

a) A solid support surface must be available (e.g., concrete or masonry).
b) The installation location must be inaccessible to children.
c) The installation location must be suitable for the weight and dimensions of the battery system.
d) The installation location must not be exposed to direct solar irradiation.
e) The installation location must not be close to the fire.
f) The altitude of the installation location should be less than 2000m.
g) The ambient temperature should be between -10°C and +55°C.
h) The ambient humidity should be between 5-95%.

5.4 Available space

The space between the left and the right battery is a recommended distance. Keep the distance as short as you can if there is no influence to the operation.

Wall Mounting Space Requirements:

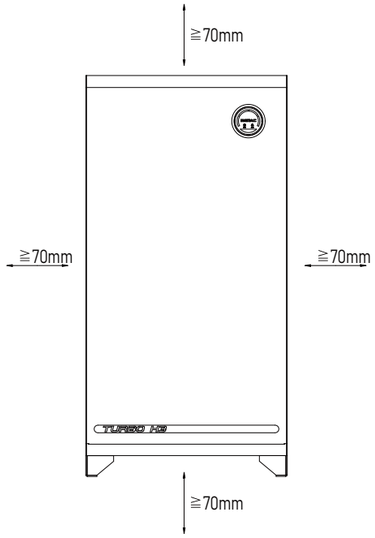

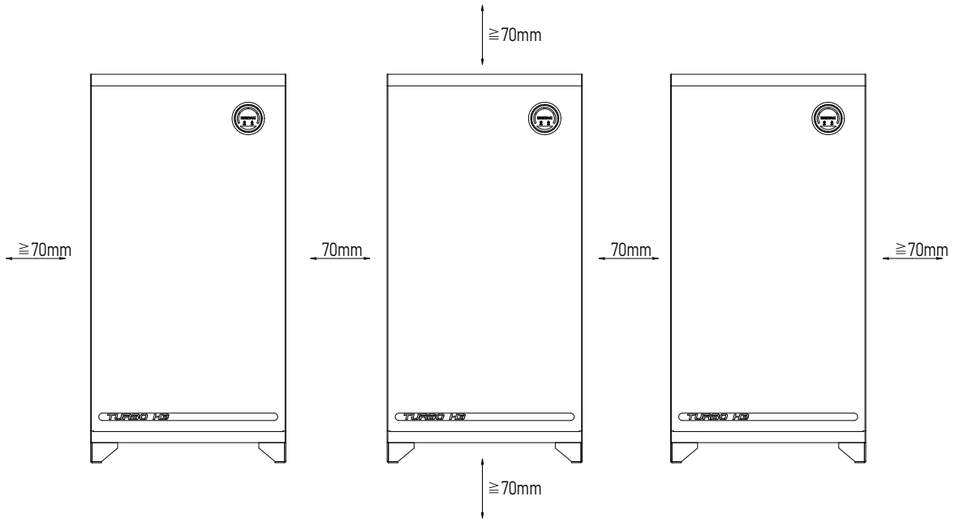

5.5 Preparation

The following tools shall be prepared before installation

Installation Tools

No.	Tool	Model	Function
1		Level	Make sure the bracket is properly installed
2		BOSCH HD18-2 Two-Speed Hammer Dril	Drill holes on the wall
3		Hammer	Hanging the bracket
4		KIMO 20V 1/2 Cordless Brushless Impact Wrench Set	Hanging the bracket
5		Screwdriver	Wiring
6		RJ45 Crimping Tool	Crimping tool for RJ45 terminal
7		Crimping plier	Crimping Tool For Insulated Electrical Connectors
8		Lifting platform carrier	lift and hang the batteries
9		Tapeline	Measure the distance between the mounting plate and the bottom

5.6 Installation steps

5.6.1 Wall-mounted Installation steps

1. Place the wall mounting plate close to the wall firmly, use a spirit level to mark the drilling position and remove the wall mounting plate.
2. Drill holes on the wall using the driller. Hole diameter 12mm and depth 60mm.
3. Fix the M8 Expansion bolts, tightening torque: 20N.m and fix the mounting plate.
4. Place the auxiliary mounting plate to determine the battery lifting position and height

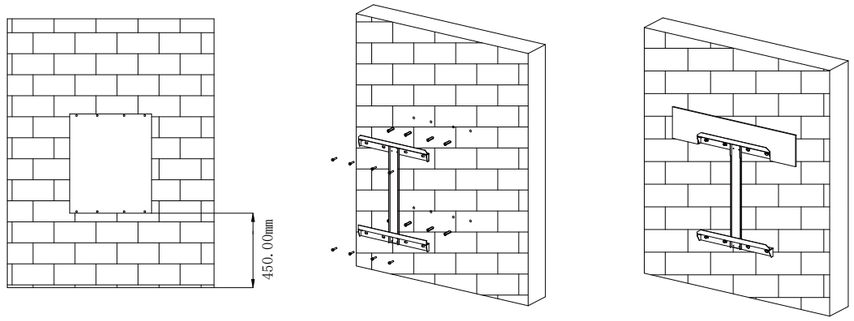

5. Use a lifting platform carrier to lift the battery wooden box, with both sides parallel to the auxiliary installation plate and higher than the battery installation bracket.
6. Hang the battery module on the bracket.

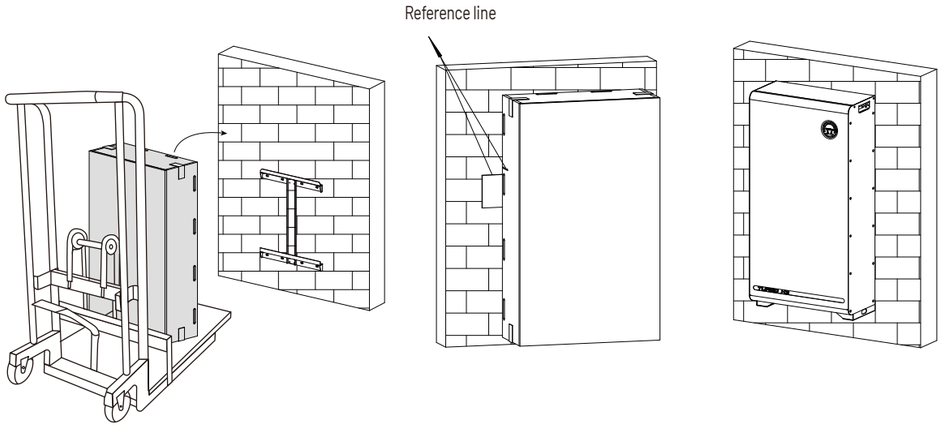

5.6.2 Floor mounted Installation steps

1.To determine the position for drilling holes, and then mark the hole position by using a marker.
2.Use the hammer drill to drill hole on the wall.

3.Install the fixing plate to the battery with M5 screws.

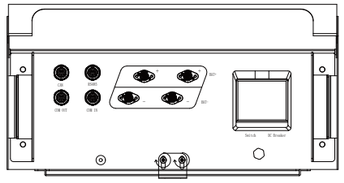

4.Use theM5 screw to fix the battery on the wall.

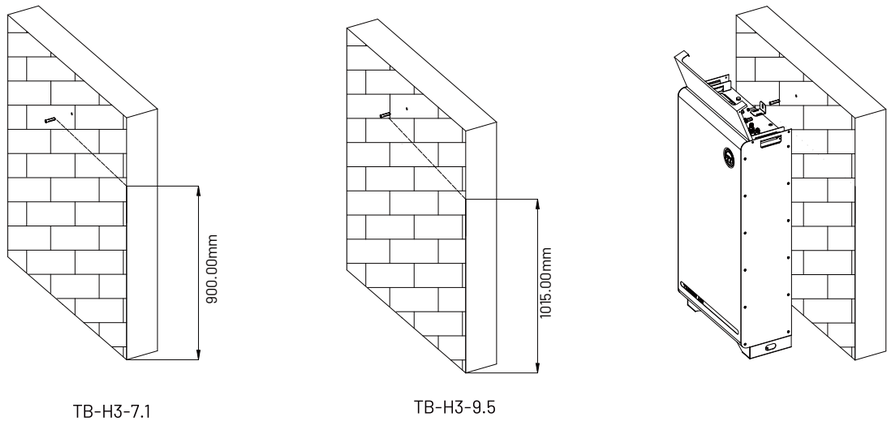

5.7 Single Machine Wiring Step

Overview of the cable connection

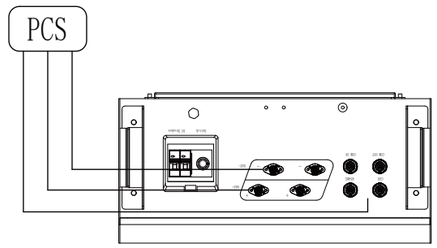

Connect the Ground Cable first before installing the equipment. Disconnect the Ground Cable before dismantling the equipment.

5.7.1 Ground Cable Connection

Notice:

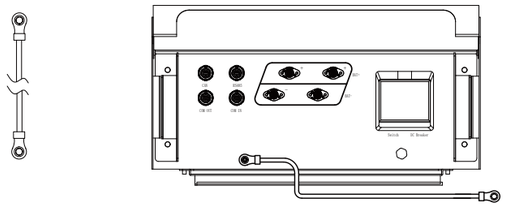

5.7.2 Power Cable Connection

Notice:

Connect the red power cable to the red power terminal, and the black power cable to the black power terminal. If a single battery is applied, you are suggested to connect any one of the two power terminal and reserve the other terminal.

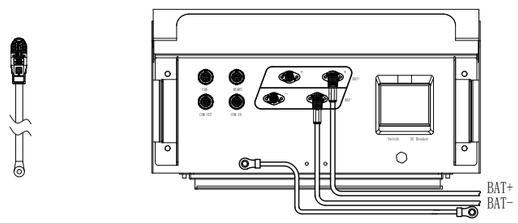

5.7.3 Communication Cable Connection

Notice:

When single battery is applied, use the communication cable to connect the CAN port of the inverter to the CAN port of the battery.

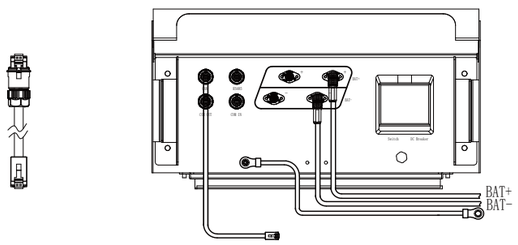

The wiring order of the communication cable is as follows:

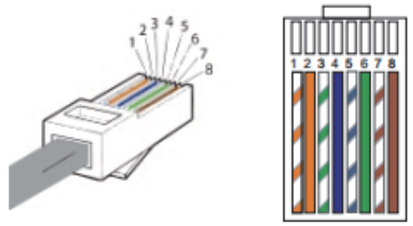

1) White with an orange stripe
2) Orange
3) White with a green stripe
4) Blue
5) White with a blue stripe
6) Green
7) White with a brown stripe
8) Brown

Pin	1	2	3	4	5	6	7	8
Function	NC	NC	NC	CANH	CANL	NC	NC	NC

5.7.4 Close the Cover

After electrical connections are complete, check all the wiring are correctly and securely connected, ensure that the battery can work normally before closing the cover.

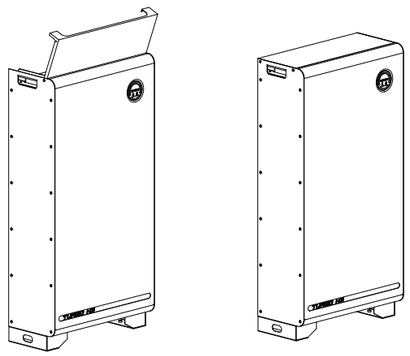

5.8 Parallel Machine wiring Step

Overview of the cable connection

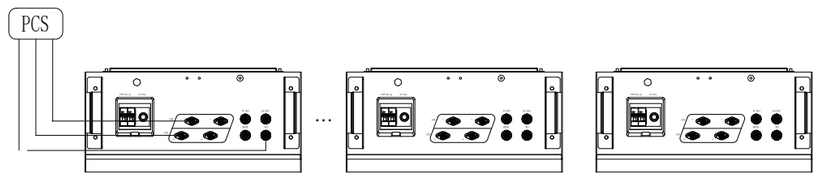

5.8.1 Ground Cable Connection

Notice:

Connect the Ground Cable first before installing the equipment. Disconnect the Ground Cable before dismantling the equipment.

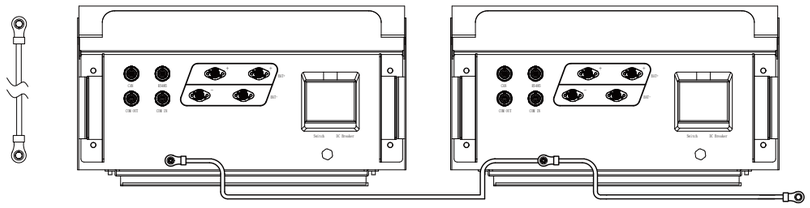

5.8.2 Power Cable Connection

Notice:

Connect the red power cable to the red power terminal, and the black power cable to the black power terminal.
Connect power cables between multi batteries in parallel, which means connect positive terminal of one battery (BAT+) to the positive terminal of the next battery (BAT+), and negative terminal (BAT-) to negative terminal (BAT-). Reserve the power terminal of the last battery.

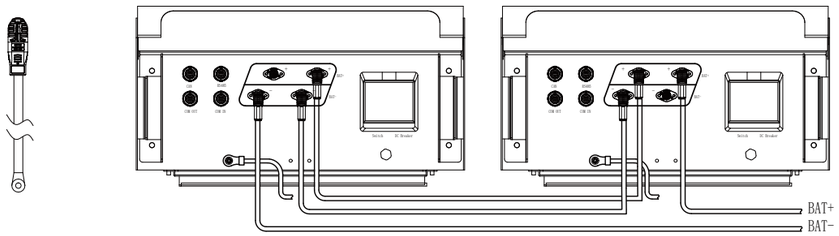

5.8.3 Communication Cable Connection

Notice:

When multiple batteries are applied, use communication cable to connect CAN port of inverter to CAN port of the battery,use parallel communication cable to connect the COM OUT port of master battery to the COM IN port of slave battery.

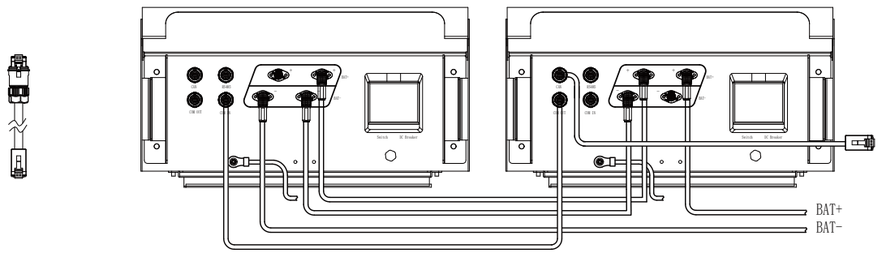

The wiring order of the communication cable is as follows:

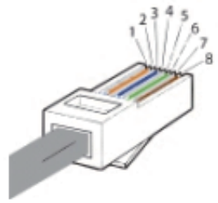

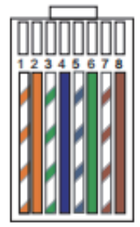

1) White with an orange stripe
2) Orange
3) White with a green stripe
4) Blue
5) White with a blue stripe
6) Green
7) White with a brown stripe
8) Brown

5.8.3.1 CAN port definition

Pin	1	2	3	4	5	6	7	8
Function	NC	NC	NC	CANH	CANL	NC	NC	NC

5.8.3.2 RS485 port definition

Pin	1	2	3	4	5	6	7	8
Function	NC	NC	485A	NC	NC	485B	NC	NC

5.8.5 Close the Cover

After electrical connections are complete, check all the wiring are correctly and securely connected, ensure that the battery can work normally before closing the cover of all batteries.

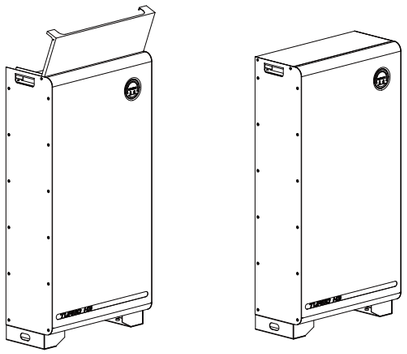

6 Commissioning

6.1 Identifying the Product

The type labels were attached on the product, which contain the product identification information. For safe usage, the user must be well-informed of the contents in the type labels.

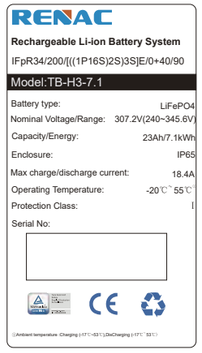

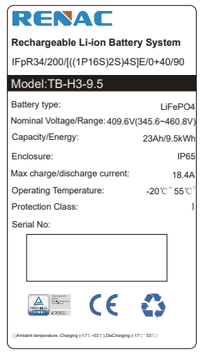

6.2 Check Before Power On

Check the following items before power on.Otherwise, the Battery System may be damaged.

No.	Items
1	The equipment is installed firmly in a place where is convenient for operation on and maintenance. The installation on place is clean and well ventilated.
2	The ground cable, power cable, communication on cable are connected correctly and securely.
3	The cable ties meet the cabling requirements and are reasonably distributed. No cables or ties are broken.
4	Unused ports are sealed.

6.3 Power On

1. Turn on the DC breaker on the battery.
2. The green running LED is flash， push the switch button of the battery.
3. If it is failed to switch on the battery system, check if all the electrical connection is correct.
4. If the electrical connection is correct, but the battery system is still unable to switch on, contact our after-sale service within 48 hours.

6.4 LED Indicator Status

6.4.1 Normal State

Status		Charging				Discharging			
Battery level indicator		L4 ●	L3 ●	L2 ●	L1 ●	L4 ●	L3 ●	L2 ●	L1 ●
Battery level	0～25%	OFF	OFF	OFF	Flash	OFF	OFF	OFF	Light
	25～50%	OFF	OFF	Flash	Light	OFF	OFF	Light	Light
	50～75%	OFF	Light	Light	Light	OFF	Light	Light	Light
	≥ 75%	Flash	Light	Light	Light	Light	Light	Light	Light
Normal Status Indicator ●		Light				Flash			

7 Decommissioning

7.1 Dismantling the battery

Turn off the DC Isolator on the battery.
Make sure that the battery level indicator of the battery is off.
Disconnect battery wiring.
Disconnect communication and optional connection wiring.
Remove the battery from the bracket.

7.2 Packaging

If possible, please pack the battery with the original packaging. If it is no longer available, you can also use an equivalent carton that meets the following requirements.Suitable for loads more than 60KG.With handle. Can be fully closed.

7.3 Storage

The battery module should be stored clean, dry and ventilated environment with a temperature range between 5℃~+30℃, avoid contact with corrosive substances, keep away from fire and heat sources and charged every six months with no more than 0.5C (C-rate is a measure of the rate at which a battery is discharged relative to its maximum capacity.) to the SOC of 40% after a long time of storage.

7.4 Disposal

Disposal of the battery module must comply with the local applicable disposal regulations for electronic waste and used batteries. Do not dispose of the battery module with your household waste. Avoid exposing the batteries to high temperatures or direct sunlight. Avoid exposing the batteries to high humidity or corrosive atmospheres. For more information, please contact RENAC.

SMART ENERGY FOR BETTER LIFE

RENAC POWER TECHNOLOGY CO., LTD.

Block C-12, No. 20 Datong Road, Comprehensive Bonded Zone, Suzhou Hi-Tech District, Suzhou, China

Tel: +86-0512-66677278

info@renacpower.com

www.renacpower.com